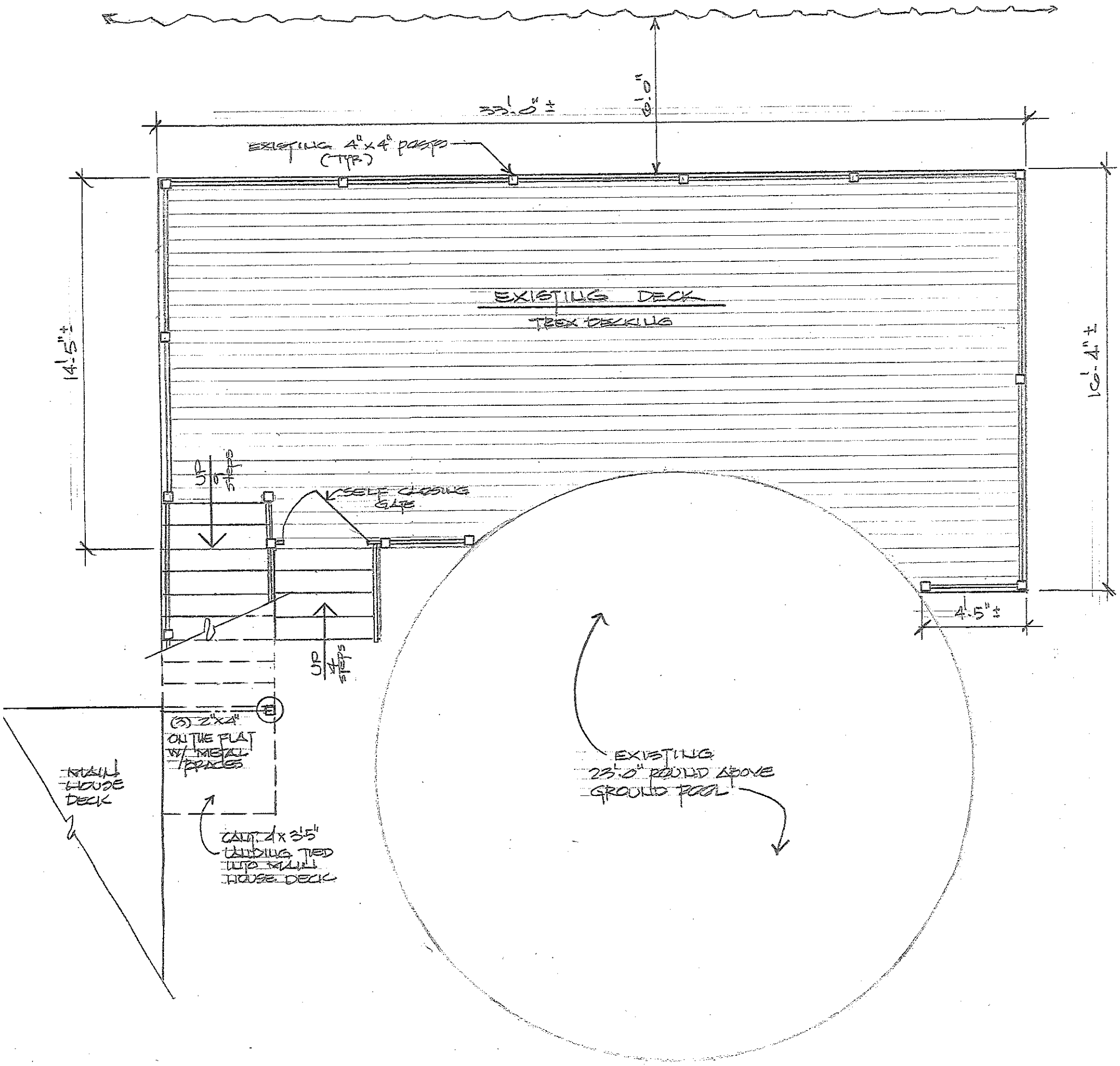

EXISTING POOL & DECK PLAN — SC: 1/4" = 1'-0"

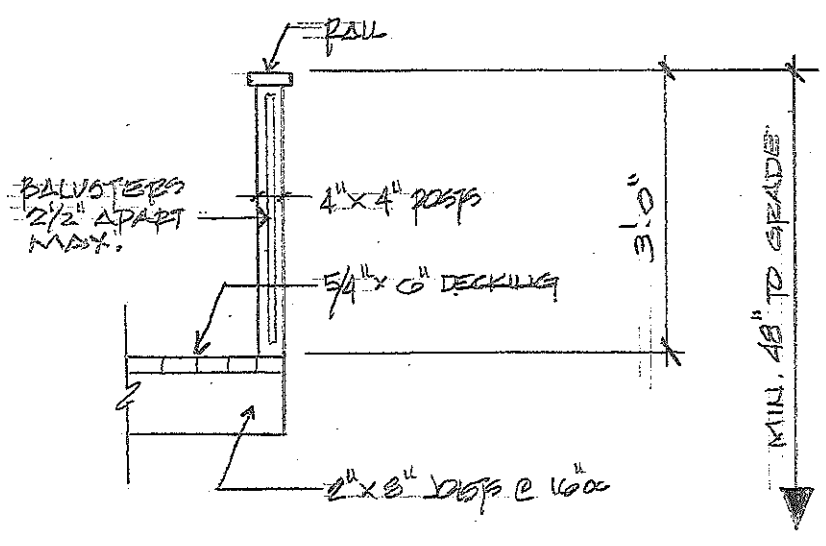

RAILING DETAIL — SC: 1/2" = 1'-0"

"AS-BUILT"

REGISTERED ARCHITECT THOMAS A. NUGENT STATE OF NEW YORK

...E TO
...SAFETY
...TH
...1. &
...
...TEP.
...E

Stairs shall have
R311.7.8 with closed
ramner so that a 4"
gs shall be 36" high
ove nosings. Railings
so as to not allow a 6"
aximum and treads

INSTALLATIONS BY ELECTRICIAN WESTCHESTER CO. OSSINING PERMIT.

EXISTING POOL & DECK, DETAIL, NOTES	SC: 1/4
"AS-BUILT" DRAWING for: PAUL QUADRAS, 6 GUALTIERE LANE, OSSINING, NY 10562	DT: 8 / DN: / REV:
LRL DESIGNS, 188 OLD WEST POINT ROAD E., GARRISON, NY 10524, 914-474-2687	1